AUTOPED(TM)/ MODEL-10 OPERATOR
APPENDIX

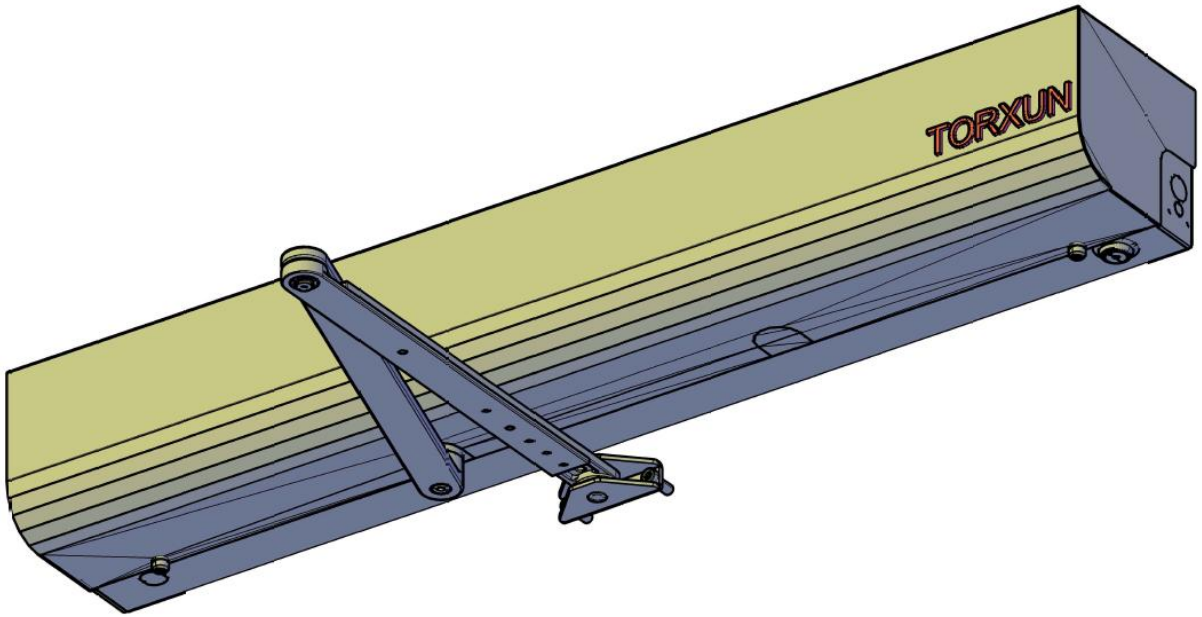

©2021

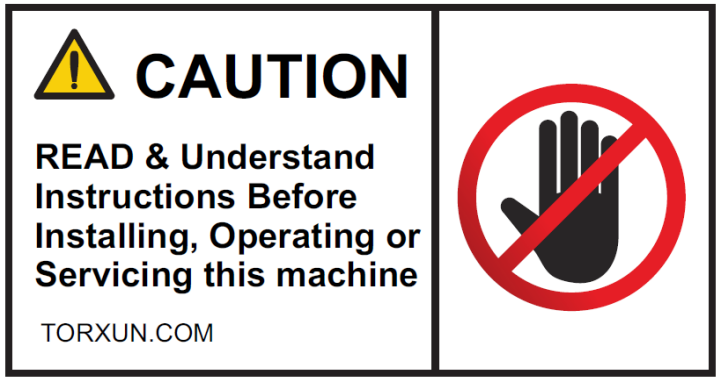

TORXUN reserves the right to make changes in the products described in this manual without notice and without obligation of TORXUN to notify any persons of any such revisions or changes. Additionally, TORXUN makes no representations or warranties with respect to this manual.

This manual is copyrighted 2021 TORXUN Vehicle Access Systems, all rights reserved.

No portion of this manual may be copied, reproduced, translated, or reduced to any electronic medium without prior written consent from TORXUN.

TABLE OF CONTENTS

AUTOPED OPERATOR PARTS AND COMPONENTS

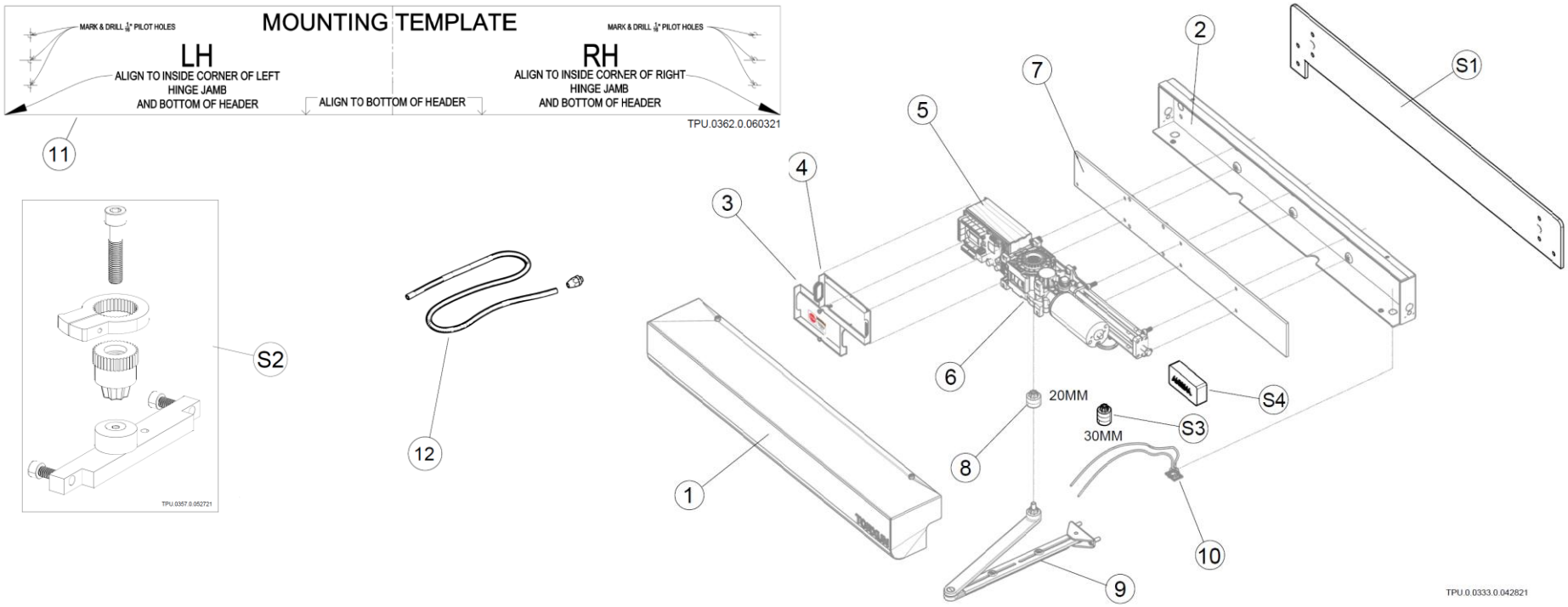

Item	Standard Parts Description	Qty
1	Enclosure Assembly - Front Cover	1
2	Enclosure Assembly - Rear Cover (Chassis)	1
3	Push Arm Assembly – factory assembled Lever Arm, Push Arm and Arm Shoe	1
4	Spindle Extension, 20mm	1
5	Rocker Switch	1
6	Control Unit Cover - Front and Rear	1 set
7	Drive Assembly–factory assembled motor-gearbox-controller on mounting plate	1 set
8	Drive Assembly Mounting Plate	1
9	Paper Mounting Template – for use on headers 4” or more in height or on door eaves	1
10	Rocker Switch Kit	1 set
11	Paper Mounting Template	1
12	Conduit Adapter Kit	1 set

Optional Parts Description

S1	Stiffener Plate (Optional)	(1)
S2	Positive Stop Kit (Optional)	(1)
S3	Spindle Extension, 30mm (Optional)	(1 set)
S4	Radio Frequency Activation Kit	(1)

SECTION I
INSTALLING AUTOPED
ON
DOOR/GATE HEADERS LESS THAN FOUR INCHES (4”)

For installation of AUTOPED Operator on headers less than four inches (4”) in height, TORXUN requires the use of the AUTOPED StiffenerPlate or its equivalent to add rigidity to the installation of the operator

IMPORTANT INSTALLATION NOTE

THE AUTOPED CAN BE USED FOR BOTH LEFTHAND OR RIGHTHAND DOOR/GATE SYSTEM WITHOUT NEED FOR ADAPTER OR MODIFICATION

TO CHANGE HAND OF OPERATOR INSTALLATION:

- **FLIP THE MOTOR-DRIVE ASSEMBLY CLOCKWISE OR COUNTER-CLOCKWISE BEFORE MOUNTING TO CHASSIS; Fig 1**
- **CHASSIS IS NEUTRAL, ORIENTATION IS THE SAME FOR LEFT OR RIGHT HAND INSTALLATION**
- **LEFTHAND OPERATOR INSTALLATION: CONTROL BOX UNIT IS AT LEFT OF GEAR BOX**
- **RIGHTHAND OPERATOR INSTALLATION: CONTROL BOX UNIT IS AT RIGHT OF GEAR BOX**

Fig I.1 CHANGING OPERATOR INSTALLATION: LEFTHAND TO RIGHTHAND OR VICE VERSA

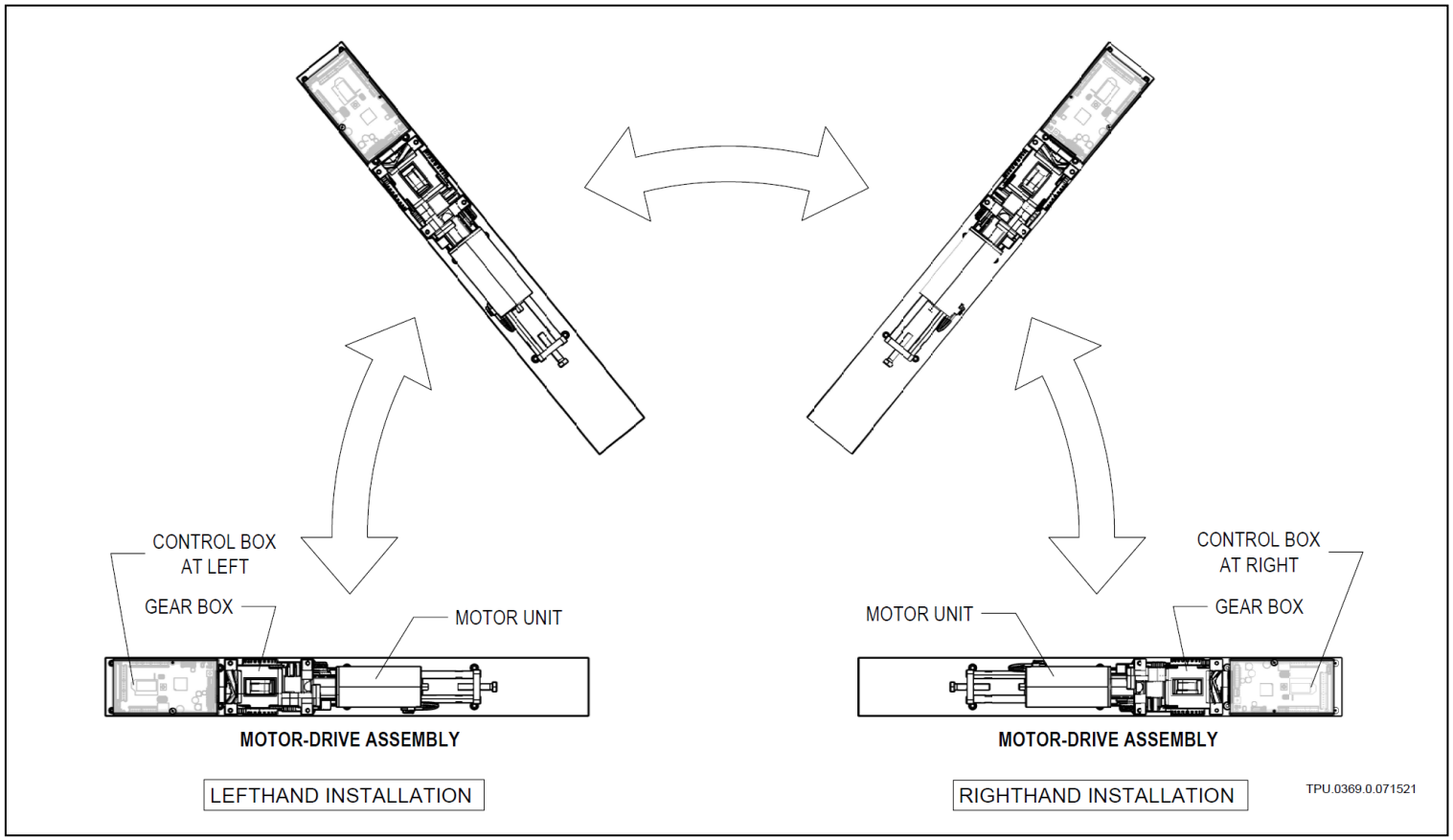

I.1 DOOR HANDING

I.1a Definition Door Handing

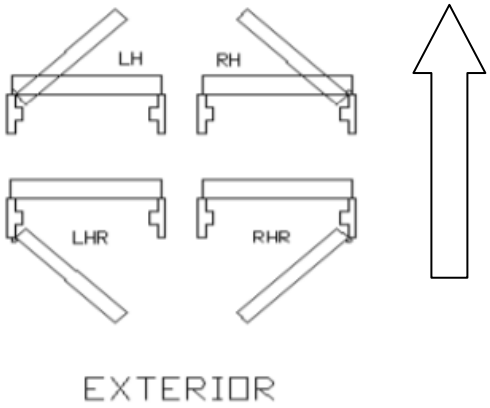

LH: Left Hand -> typically with a pull arm

RH: Right Hand -> typically with a pull arm

LHR: Left Hand Reverse -> typically with a push arm

RHR: Right Hand Reverse -> typically with a push arm

I.1b Push Application – Same Drive Unit for LHR and RHR

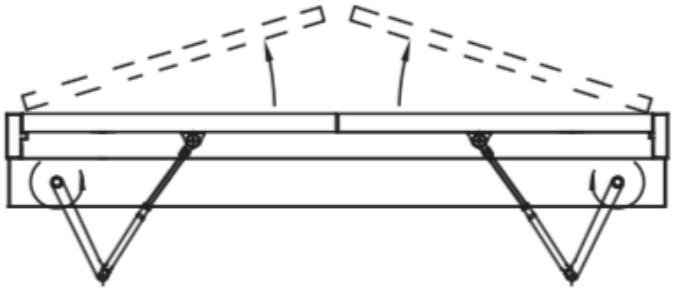

I.1c Pull Application – Same Drive Unit for LH and RH

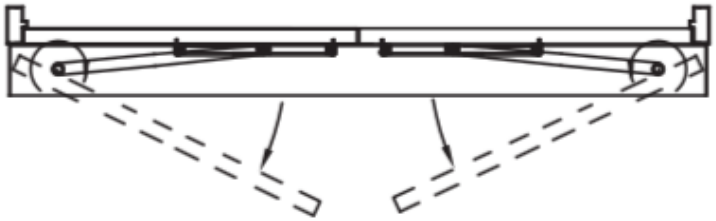

I.2 INSTALLATION: LEFTHAND OPERATOR FOR HEADERS LESS THAN 4” IN HEIGHT

STEP 1 Use StiffenerPlate for Lefthand (LH) installation

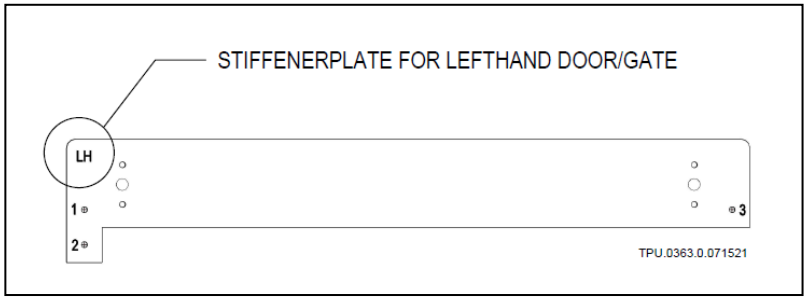

STEP 2 Align **“X”** to corner of left hinge jamb and bottom of header

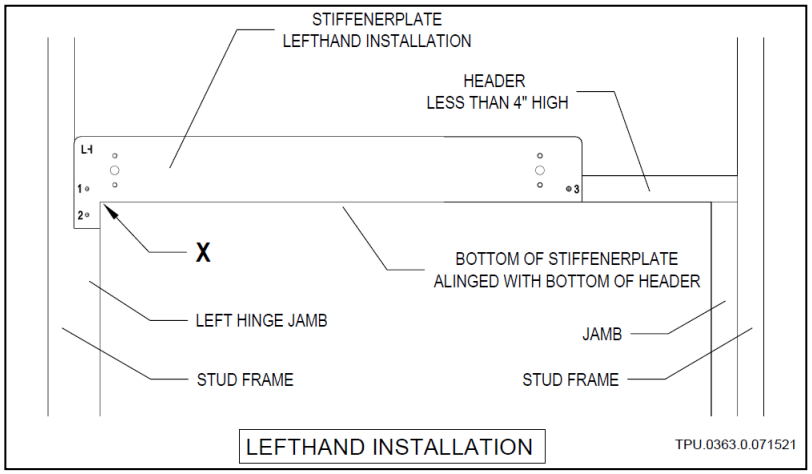

STEP 3 Center-punch pilot holes 1,2,3

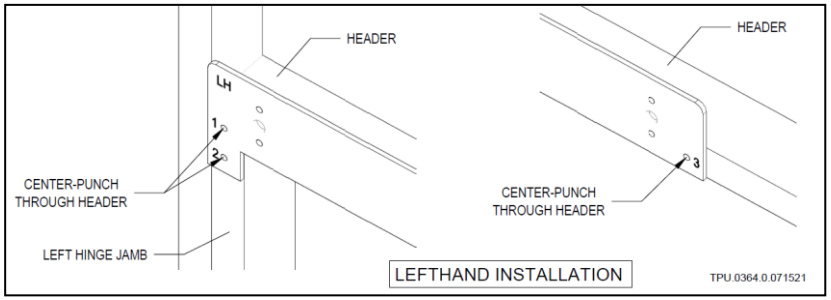

STEP 4 Drill 1/16” pilot holes 1,2,3

STEP 5 Fasten[1] StiffenerPlate through holes 1,2,3

STEP 6 Mount[2] operator Chassis to StiffenerPlate

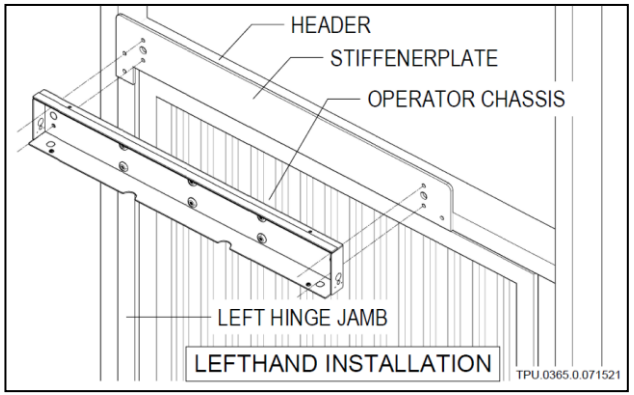

STEP 7 Mount[3] Motor-Drive assembly to operator Chassis

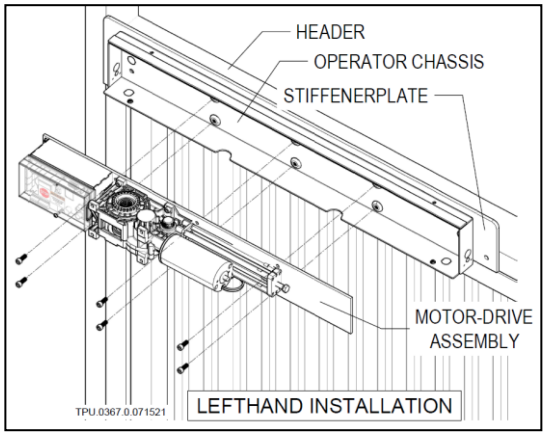

STEP 8 Refer back to AUTOPED Installation Manual, Section I.5 to continue installation of the Swing Arm assembly

---

[1] Type, size and material of fasteners by installer
[2] Use screws NF 7/16 x 20 x 3/4 included in kit to mount
[3] Use screws M6 x 1.0 x 12 included in kit to mount

I.3 INSTALLATION: RIGHTHAND OPERATOR FOR HEADERS LESS THAN 4” IN HEIGHT

STEP 1 Use StiffenerPlate for Righthand (RH) installation

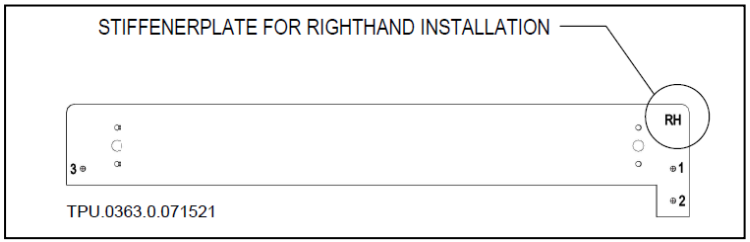

STEP 2 Align **“X”** to corner of right hinge jamb and bottom of header

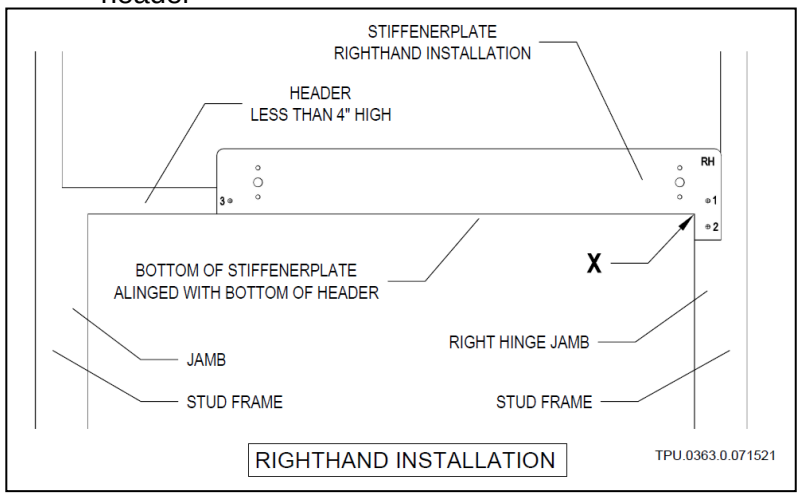

STEP 3 Center-punch pilot holes 1,2,3

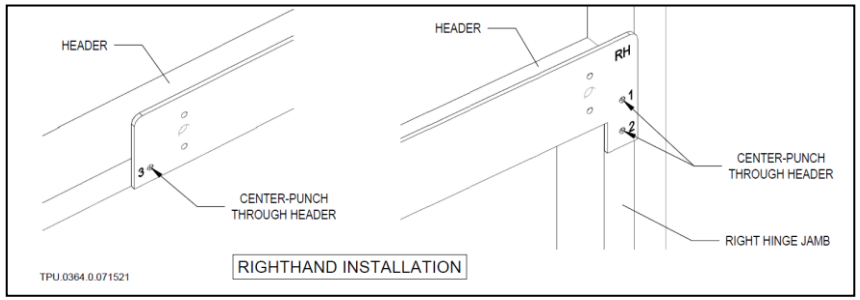

STEP 4 Drill 1/16” pilot holes 1,2,3

STEP 5 Fasten[4] StiffenerPlate through holes 1,2,3

STEP 6 Mount[5] operator Chassis to StiffenerPlate

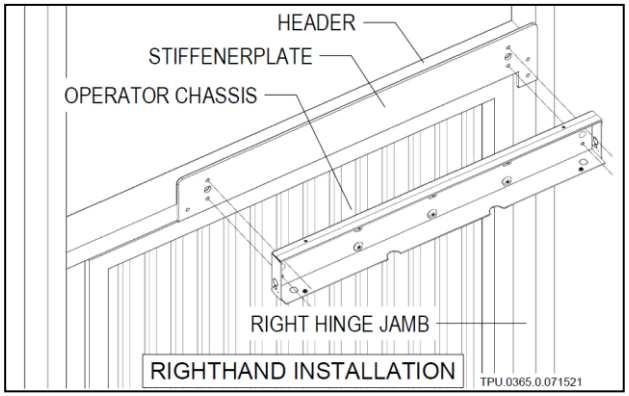

STEP 7 Mount[6] Motor-Drive assembly to operator Chassis

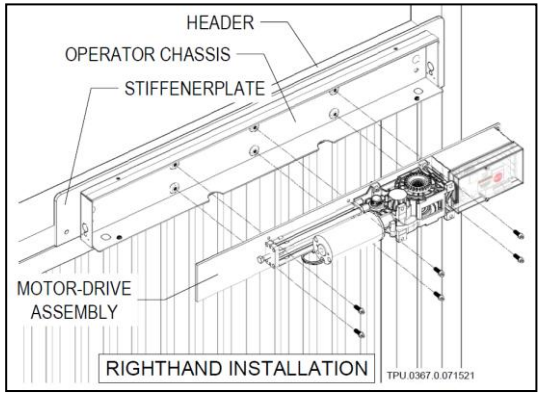

STEP 8 Refer back to AUTOPED Installation Manual, Section I.5 to continue installation of the Swing Arm assembly

---

[4] Type, size and material of fasteners by installer
[5] Use screws NF 7/16 x 20 x 3/4 included in kit to mount
[6] Use screws M6 x 1.0 x 12 included in kit to mount

SECTION II
INSTALLING THE AUTOPED
OPTIONAL POSITIVE STOP

TORXUN recommends use of the optional Positive Stop Kit when a physical stop such as a wall, bollard, floor stop or similar items are not in place to limit the gate or door from opening past safe limits 105º

II.1 OPTIONAL POSITIVE STOP KIT (P/N M10S.0040)

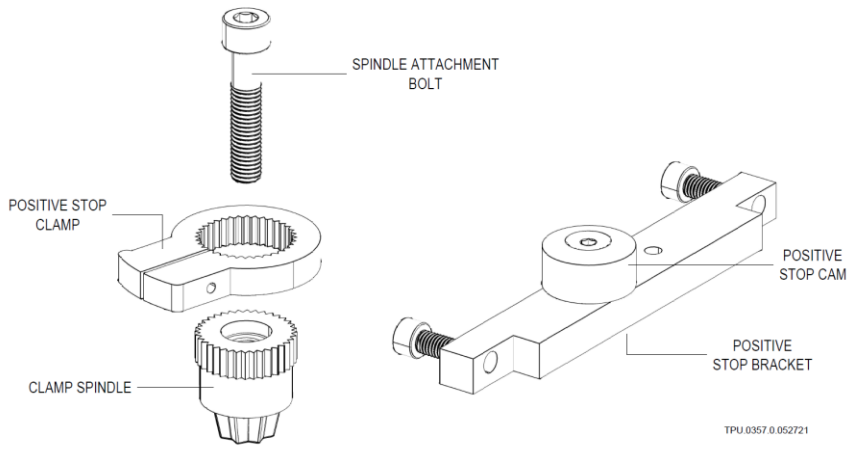

II.2 INSTALLING THE POSITIVE STOP

STEP 1 Swing door/gate to max opening; keep in open position.

STEP 2 Remove top two bolts on the Gear Box mounting plate

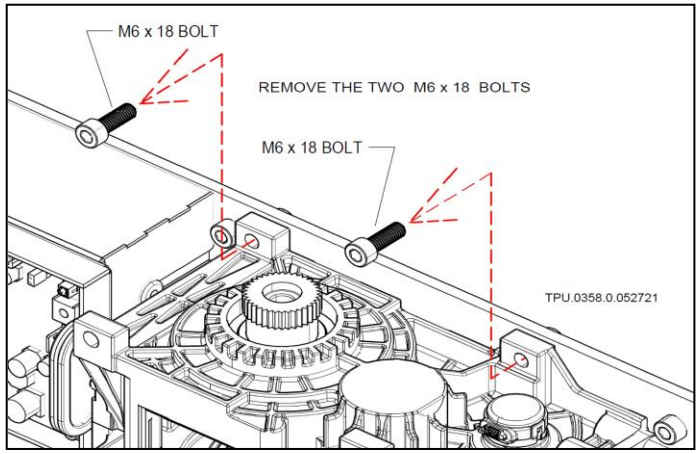

STEP 3 Install the Positive Stop Cam Bracket and Cam; use the two stainless steel M6x3 bolts included in the kit

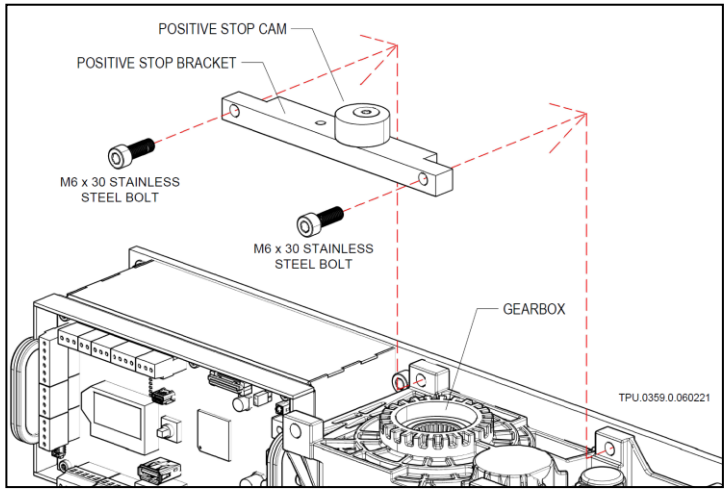

STEP 4 Gather the Spindle bolt, Positive Stop Clamp & Spindle

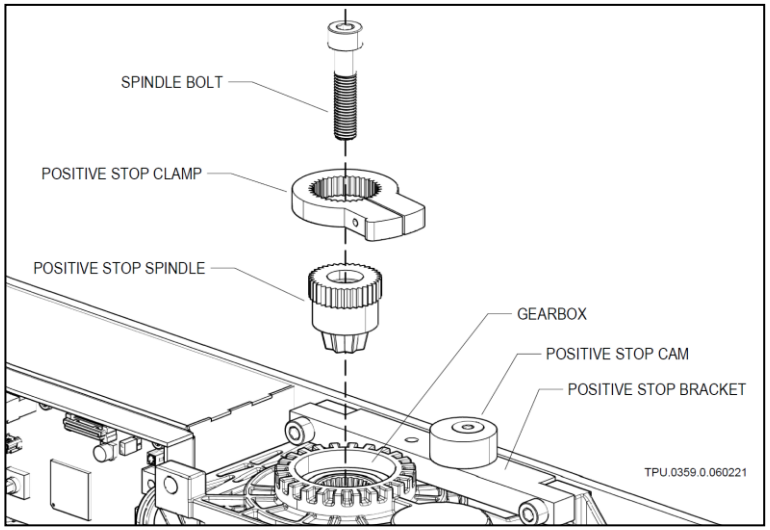

STEP 5 Assemble the Stop Clamp and Spindle together

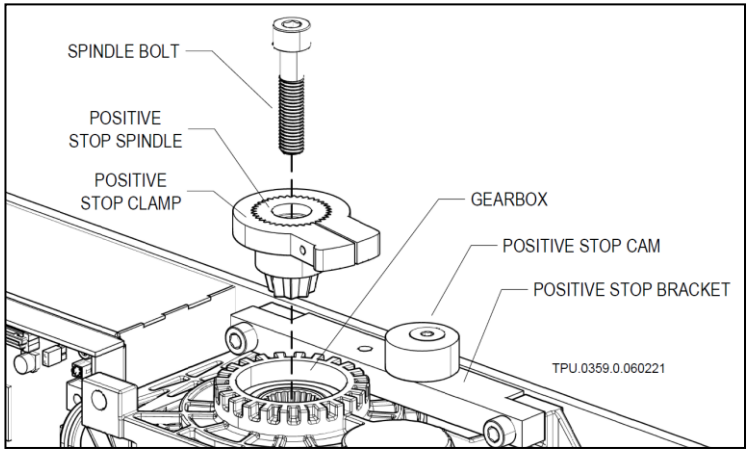

STEP 6 Insert Clamp and Spindle assembly to the Gearbox

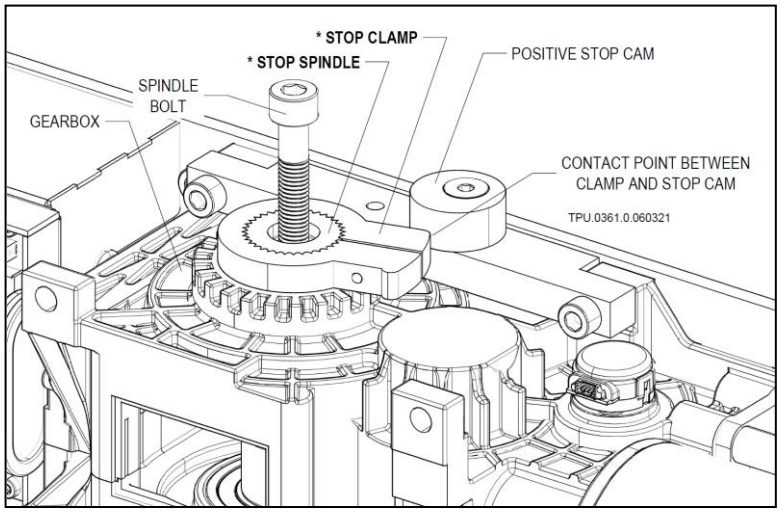

<u>IMPORTANT NOTE ON STEP 6</u>

Make sure that the Stop Clamp* and Stop Spindle* are flush with each other when assembled (see diagram*)

When placing the Stop Clamp* over the Stop Spindle*, the door must be in the open position no more than 105° from closed position. Place the Stop Clamp so that its rounded vertical face (contact point) is a hairline from making contact with the Positive Stop Cam.

STEP 7 Insert the Spindle Bolt to the Positive Stop Clamp and Spindle assembly; tighten to fasten the assembly to the Gearbox

STEP 8 Go to section II.3 for Adjustment of Stop position

II.3 ADJUSTING THE STOP POSITION

Note: Maximum swing open position is 105º

STEP 1 Clamp the end of the Motor Shaft with a Vice Grip to keep shaft from rotating

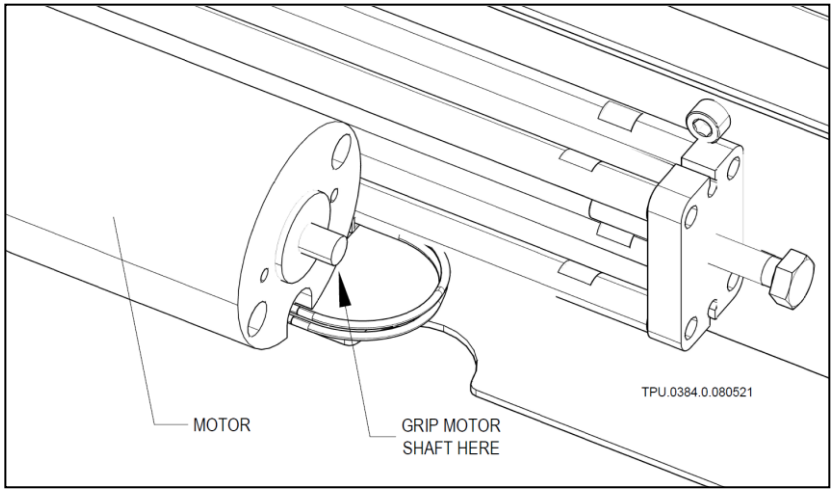

STEP 2 Loosen the set screw of the Positive Stop Clamp

STEP 3 Pull the Positive Stop Clamp off from the Spindle

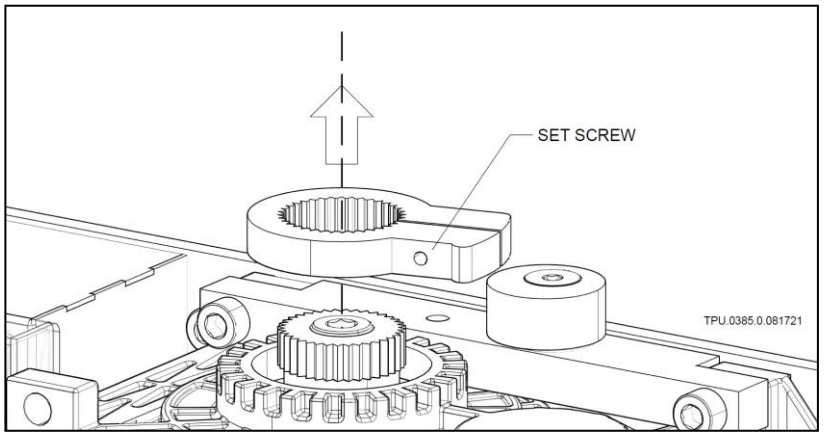

STEP 4 Rotate the Positive Stop Clamp clockwise or counterclockwise as needed (1~2 teeth at a time)

STEP 5 Reset the Positive Stop Clamp back on to the Spindle

STEP 6 Tighten the set screw

STEP 7 Remove grip from motor shaft, turn operator on to test the open position of Door/Gate panel

STEP 8 If needed, repeat the preceding steps to test again

Fine adjustments of the stop position may be necessary and is done by adjusting the Stop Cam position

STEP 9 Loosen the Positive Stop Cam Retaining Bolt

STEP 10 Rotate the Positive Stop Cam clockwise or counterclockwise as needed

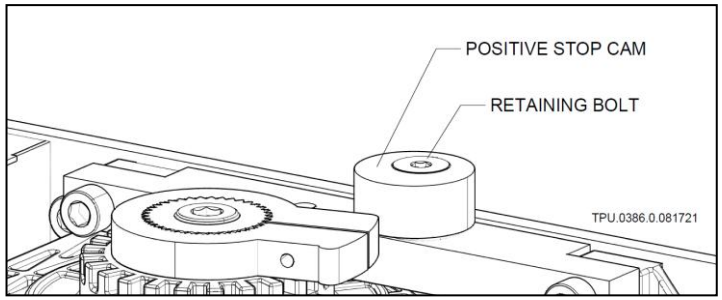

STEP 11 Tighten the Positive Stop Cam Retaining Bolt

STEP 12 Run the Operator to test the open position of Door/Gate panel

STEP 13 If needed, repeat the preceding steps and test again

SECTION III
ADJUSTING
CLOSING-SPRING PRELOAD

In the process of installing the AUTOPED, the spring tension may need to be adjusted to regulate the closing pressure of the door or gate panel. Make these adjustments when the door or gate panel does not fully close or slams when closing.

III. ADJUSTING CLOSING SPRING PRELOAD

The AUTOPED operator is equipped with a closing spring that aids in the closure of the gate/door and to maintain closing speeds while the gate/door is in manual mode. When power to the operator is cut or turned off, the closing spring will allow the Door/Gate to close in a controlled manner, fully latching the door lock system.

The tension of the spring is responsible for regulating the amount of pressure the door requires to be pushed open before the “Push and Go” assist takes over.

Preload adjustment is done by turning the Adjusting Screw. By default, distance **X** between top of head of Adjusting Screw and spring bracket is:

X = 1-1/32 inch (26 mm)

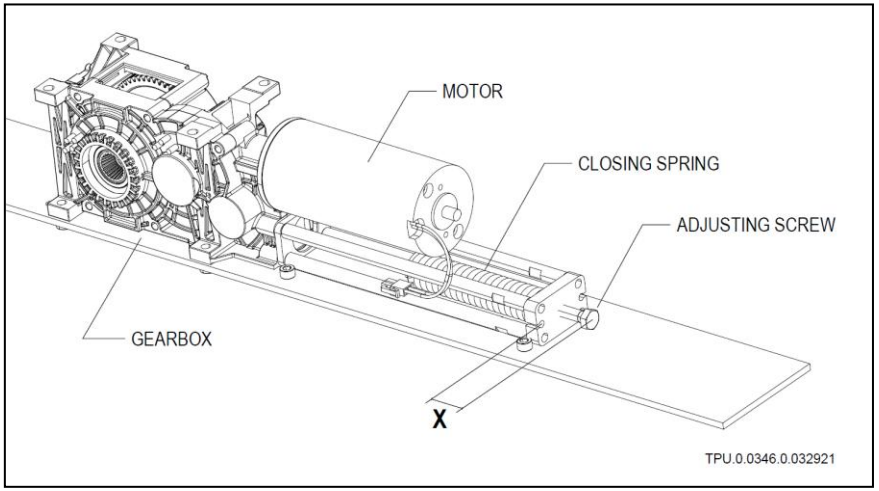

To adjust the Closing Spring Preload:

STEP 1 Swing Door/Gate panel open to about 60º

STEP 2 Allow panel to close on its own

STEP 3 Check to see if Door/Gate latches on full lock

STEP 4 Adjust distance **X** according to Table II.3 (below)

STEP 5 Repeat the above steps if needed

Table II.3 Preload **X** Values

Door/Gate panel width	**37”**	**43”**	**49”**	**55”**	**63”**
Standard push arm					
Measure “**X**”	1-9/16”	1-7/16”	1-1/4”	1-1/16”	7/8”
Optional slide arm					
Measure “**X**”	1-7/16”	1-5/16”	1-1/16”	3/4”	11/16”

SECTION IV

MENUS AND PROGRAMMING

IV.1 PROGRAMMING FLOW: GUIDE CHART

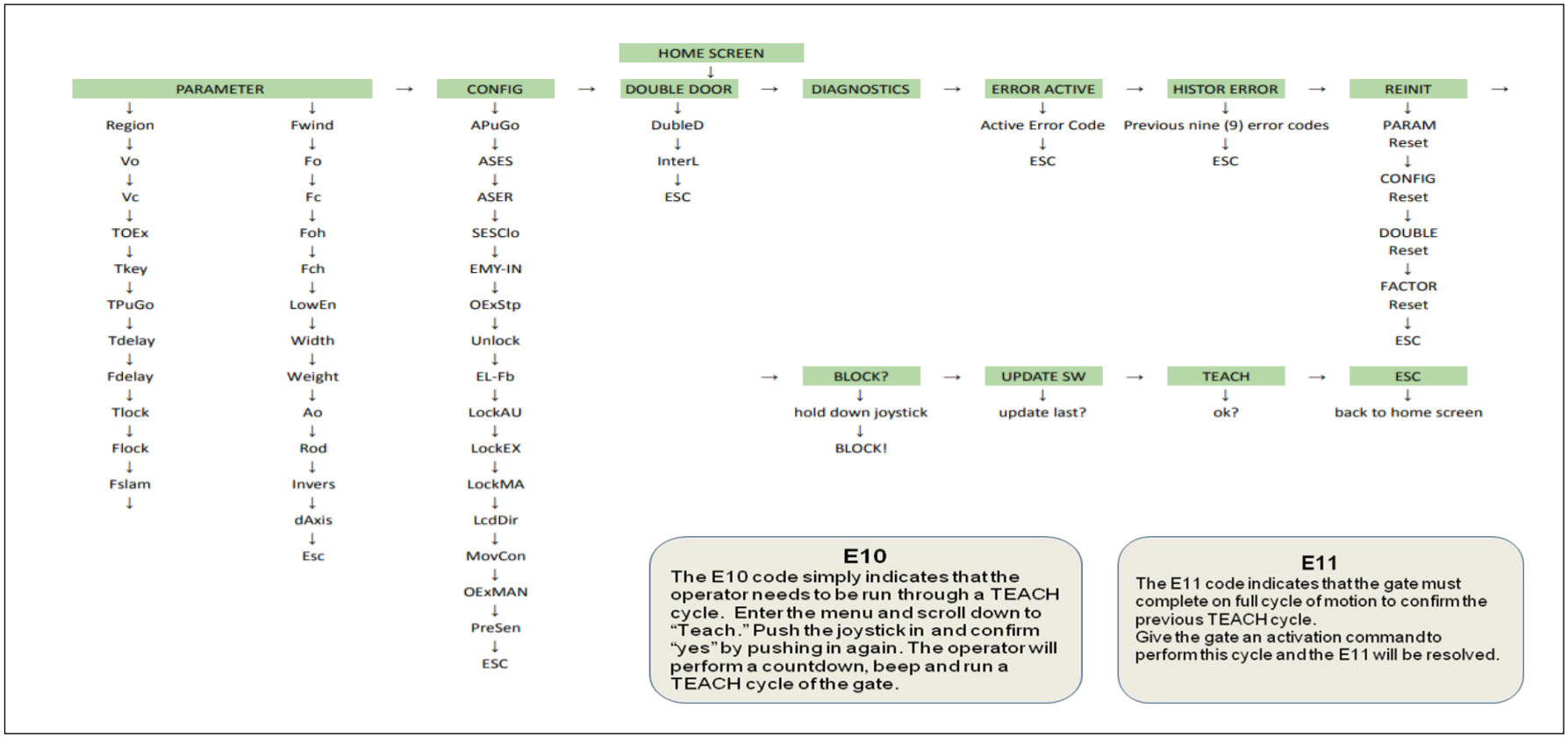

IV.2 MENU GLOSSARY

Display	Description
OEO	Exterior activation sensor (exterior activation signal)
OEI	Interior activation sensor (interior activation signal)
KEY	Activation device (external switch activation signal, key switch, card reader, etc.)
SES	swing side Door/Gate mounted sensor (swing side safety signal)
PRE	Header mounted sensor on swing side
SER	Push side door mounted sensor (approach side safety signal)
SEF	Door mounted sensor for obstacle detection (recycle sensitivity)
EMY-IN	Emergency open input (emergency input signal)
PUGO	Push and go

IV.3 CONTROL UNIT LED LIGHTS

LED description and color indications		
LED	**Description**	**Indicator**
SOK	System ok	Green flashing
OE active	Opening devise	Blue=active
SE active	Safety devise	Yellow=active
Error	Error	Red
E-lock relay	E-lock relay	White

IV.4 LCD SCREEN GLOSSARY

Display	Description
<REF?>	Waits for reference switch
< ?? >	Unknown
><	Closed
>##<	Closed and locked
<<>>	Opening
<>	Open
>><<	Closing
==	Stopping

IV.5 CHART FOR MENUS AND WHAT THEY DO

Menu Title	Description
Parameter	Sets the parameters for swing Door/Gate movements
CONFIG	Configuration: sets the parameters of the AUTOPED control features and functions
DOUBLE DOOR	Sets the closing sequence and interlock function
DIAGNOSTICS	Diagnostic tools that display the status of various inputs
ERROR ACTIVE	❖ Displays pending active errors ❖ Activate error list is updated with the latest addictions appearing at the end ❖ A0 indicates the latest active error
HISTORY ERROR	❖ Displays all active errors that were detected and then corrected or not corrected. ❖ H0 indicates the latest active error
REINT	Reinitialization resets settings back to factory default
BLOCK?	Locks/unlocks joystick
UPDATE SW	Start the upgrade process from the USB stick
TEACH	❖ Programs the initial setup, finds errors (if any) ❖ Programs a new setup procedure when deemed necessary

IV.6 CHART FOR OPTIONS IN THE PARAMETER MENU: SETTINGS FOR DOOR/GATE MOVEMENT

Device	Unit type	Default	Value	Description
Region	Both	Eu	Eu or us	EU- Europe; US- united states Software version determined by UL standards. Must be changed to US
Vo	Low energy	9	0-9	
Vc	Low energy	9	0-9	
TOEx	Low energy	5s	3-60s	ANSI 156.19 for low energy: TOEx must be no less than 5 seconds
TKey	Low energy	5s	3-180s	❖ TKey sets the hold open time resulting from an activation signal from a device (referred to as KEY) on terminals 2+3 ❖ With TOEx and TKey, you can set a different hold open time for different activation devices by using different terminals
TPuGo	Low energy	3s	3-180s	Determines how long the Door/Gate stays open
TDelay	Low energy	.2s	0.0-4.0s	Tdelay sets the amount of time the door hesitates to allow the lock to release before opening.
FDelay	Low energy	Off	Off-7.0A	Fdelay is a temporary “hold closed” force applied to the door to keep it closed while the electric lock is being released. This parameter sets the amount of force that is applied. FDelay is only active if TDelay setting is greater than 0.
TLock	Low energy	0.5s	0.0-4.0s	Sets amount of time Door/Gate panel will press against lock to engage it.
Flock	Low energy	2.0A	Off-7.0A	Sets amount of force that is applied to the Door/Gate panel to engage the lock at the closed position. It is only active if TLock setting is greater than 0.
FSlam	Low energy	Off	Off-10	Accelerating function (Force Slam). For example: when a Door/Gate panel needs to be forced shut due to a latch or heavy seals.

Device	Unit type	Default	Value	Description
FWind	Low energy	Off	Off Open Close Both	❖ Obstacle detection optimized for exterior doors/gate panels (wind loads) ❖ Assuming that a gust of wind is not a hard obstacle which will stop the door, the motor current will rise “slowly”. In this case the AUTOPED control unit will provide additional power to continue the door movement. ❖ When FWind is turned ON, TORXUN strongly recommends the use of Door/Gate panel mounted sensors to stope or reopen the door if an obstacle is detected during the door cycle
Fo	Low energy	9	0-9	❖ Opening force (force open) when an obstacle is detected during open/close cycle or both ❖ In standard mode obstacle detection can not be switched on/off. It can be adjusted with parameters for “Fo”=force opening and “Fc”=force close. To make obstacle detection least sensitive, set both parameters on max. To make obstacle detection most sensitive, set both parameters on minimum. (caution, this can allow the drive to react to small changes in wind)
Fc	Low energy	9	0-9	
Foh	Low energy	4	0-9	Hold open force (force hold open)
Fch	Low energy	0.0A	0.0A-3.5A	❖ Interlocking force (force close hold) automatically programs Flock and FDelay if these settings are set at 0. ❖ If there is no electric lock and the interlocking force Fch is not adjusted, error 14/02 will be displayed as a warning after the teach 1 procedure and the Door/Gate will endlessly reopen.
LowEn	Low energy	on	On	Door/Gate panel is low energy in both directions. Door/Gate panel is activated by a knowing act
Width	Low energy	48in	30-63in	Width of the Door/Gate panel from edge to edge.
Weight	Full and low	100~250lbs	100-550lbs	Weight of the Door/Gate panel.
Ao	Low energy	95°	20°-190°	Opening angle of the door (angle open) Teach must be activated after this setting has been changed.

Device	Unit type	Default	Value	Description	Device
Rod	Full and low	STD-PH	STD-PH	Outswing arm and Arm-Shoe	Push function
					Motor cable connector: X=orange
			SLI-PL	Inswing arm with track and roller	Pull function
					Motor cable connector: Y=Green
			SLI-PH	Outswing with inswing track and roller	Push function
					Motor cable connector: X=orange
Rod	Low energy	STD-PH	❖ If panic breakout latch is installed and the motor is plugged in backwards or the wrong arms are chosen during programming, there is a possibility the Door/Gate panel can burst open unexpectedly towards the installer once TEACH mode is initiated. ❖ Teach must be activated after this setting has been changed.		
Inverse	Low energy	Off	Off-On	In the event of a power failure/error, the Door/Gate panel is opened by spring power from any position (unless it has been locked). The position of the motor connector is reversed regarding the standard drive unit.	
				Teach must be activated after this setting has been changed.	
dAxis	Low energy	7in	2-25in	Distance between center line of the door hinges and the mounting surface of the operating assembly. dAxis is an approximate value. Depending on the installation situation, dAxis may have to be estimated.	
				Teach must be activated after this setting has been changed.	

IV.7 CONFIGURATION MENU OPTIONS AND DEFINITIONS

Device	Unit type	Default	Description
APuGO	Off	Off, 2°-10°	Triggering angle for Push and Go (angle Push and Go)
ASES	95°	45°-95°	Lock out angle: Angle at which the swing side Door/Gate panel mounted sensor is ignored just before open/ If Ao is changed, ASES is automatically set to Ao.
ASER	0°	0°-60°	Lock out angle: angle at which push side of the Door/Gate panel sensor is ignored just before closing.
SESClo	Inactive	Active	Sensor mounted on swing side of Door/Gate is activated or inactivated during closing cycle
		Inactive	

Device	Unit type	Default	Description
EMY-IN	CL-SPR		Configuration of the emergency terminal (break contact switch)
		CL-SPR	Spring close (standard application)
		STOP	Stops Door/Gate panel closing/opening
		OPEN	Opens the Door/Gate panel
		CL-MOT	Motor close (inverse application)
OExSTp	Off	Off	N/A ❖ Used to setone of the activation “values” to “sequential” mode. ❖ Sequential mode is used to hold the door open until a second activation is received. ❖ One activation opens the Door/Gate panel, and a second activation is required to close the Door/Gate panel.
		OEI	Opening devise inside
		OEO	Opening devise outside
		KEY	Key opening devise
		RADIO	N/A
UNLOCK	PERMAN	IMPULS	When the Door/Gate panel is first opened: momentarily unlocks the electric lock
		PERMAN	When the Door/Gate panel is first opened: Permanently unlocks the electric lock.
EL-FB	Off	Off	Electric lock status feedback
		N.O.	Open if unlocked (-); closed if locked (+)
		N.C.	Open if locked (+); closed if unlocked (-)
Lock AU	UNLOCK	UNLOCK/LOCK	❖ Sets the condition of the lock when in automatic mode. ❖ Only visible when Unlock is set to PERMAN.
LockEX	LOCK	UNLOCK/LOCK	❖ Sets the condition of the lock when in EXIT mode. ❖ Only visible when Unlock is set to PERMAN
LockMA	UNLOCK	UNLOCK/LOCK	❖ Sets the condition of the lock when in MANUAL mode. ❖ Only visible when Unlock is set to PERMAN
LcdDir	0	0-1	Orientation of the display (LCD direction)
MovCon	OFF	OFF/ON	Endurance test Open/Close (moving continuous)
Pre Sen	N.C.	Off/N.C./N.O.	Swing side presence sensor output logic
OExMAN	ON	OFF/ON	❖ On enables activation to reopen the door during the closing cycle of a manual opening. ❖ OExMAN only if APuGo is turned OFF

IV.8 DOUBLE DOOR MENU CHART

Device	Default	Value	Description
DoubleD	Off	Off MastrA SlaveA MastrB SlaveB	Closing sequence role and interlocking side
AoSeq	20°	0-110°	Current delay angle for opening sequence control (only visible if DoubleD is active)
AcSeq	20°	0-110°	Current delay angle for closing sequence control (only visible if DubleD is active)
InterL	Off	Off SideA SideB	Interlocking door system where one door will only receive open commands once the other is closed
ILAuto	Active	Inacti Active	Interlock mode Operating mode AUTOMATIC (only visible in InterL is active)
ILExit	Active	Inacti Active	Interlock mode operating mode EXIT (only visible if InterL is active)
ILNigt	active	Inacti Active	Interlock mode Operating mode Night (only visible in InterL is active)

IV.9 DIAGNOSTIC TABLE

Devise	Description	Value
K-I-O-R-S-P-E	(K) Key (I) OEI (Interior Activation Sensor) (O) OEO (Exterior Activation Sensor) (R) SER (Push Side Door Mounted Sensor) (S) SES (Swing side door mounted sensor) (P) Swing side header mounted presence sensor (E) EMY-IN (Emergency Open Input)	(+) Active (-) Inactive (Read only and cannot be changed)
-0.0A ; 0°	Displays motor current and the swing door opening angle (Example: 2.1A ; 65°)	
X.YA/Z°	Displays the actual current used by the motor and the current angle of the door/ gate panel.	
Simulate Key	Key command that opens the door panel by pressing OK	

Devise	Description	Value
E-Lock	L- Display status of the lock FB- Display input El-FB. Press OK to activate the electric locking device	(L+) locked (L-) Unlocked (FB+) Locked (FB-) Unlocked
PG Version	Packaged software	
SW Version	Version of software	
UL Version	Software changed due to UL specifications	
HW Version	Version of logic PCB	
Cycles	Total number of openings the gate has performed.	
RO R1 FP RP	Display what the door/gate panel is doing (R0) Relay print with address 0 (R1) N/A (FP) N/A (RP) N/A	(-) Identified and ready for operation (+) Neither identified or registered (a) Defective or error (x) Removed

IV.10 CHART FOR THE REINIT MENU (RESET BACK TO FACTORY DEFAULT)

Device	Description
FACTORY RESET	All settings that were programmed into the control will be reset to factory defaults
PARAM RESET	Resets/sets all motion parameters back to the default values (inclusive opening angle, rod assemblies, invers and dAxis)
CONFIG RESET	Resets all configuration settings back to the default values
DOUBLE RESET	Resets simultaneous pair settings and airlock settings back to the default values

IV.11 BLOCK/UNBLOCK MENU: LOCK KEYS

Menu	Description		
Block?	To lock the joystick	Press ok for 2 seconds	The display shows temporarily BLOC!
UBLOC?	To unlock the joystick	Press ok for 2 seconds	The display shows temporarily UBLOC
BlockD	When the joystick is blocked, the “home display” shows BLOCKD, if the joystick is operated!		

IV.12 TEACH MENU

Device	Description
TEACH OK?	Programs the setup procedure within the AUTOPED controller.

SECTION V
TROUBLE SHOOTING AND ERROR CHARTS

V.1 ERROR CODE DEFINITION

A	Drive unit deactivates itself during a certain period: manual operating mode or stopping position
F	Fatal error
H	Manual operating mode with restarting attempt
W	Warning
A0	A(active error); (0) most recent error

Error No		Description	Cause	Elimination	Checking time	Reaction
E1	01	Encoder	Channel A lost	• check: ○ Encoder Connection ○ Motor Cable ○ If jumper is inserted on x106 • Direction of motor rotation does not match swing side of door • Door is blocked	During Run	H
	02		Channel B lost			
	03		Channel A+B lost			
	04		Short Circuit A+B		Prior to Start-up	H
	05		Malfunctions			
	06		Motor Cable incorrectly plugged in			
	07		No signal channel A		During Encoder Test	H
	08		No signal channel B			
	09		No signal channel A+B			
	10		Short Circuit A+B		Prior to Start up	H
	11		Malfunctions		During Test	H
	12		Malfunctions			
	13		Encoder not connected		Always	H
E2	02	Motor Current	Current too high	• Check: ○ Motor cable ○ If jumper is inserted on x106	Prior to start up	H
			Current too low			
			Jumper missing			
E3	01	Latch check (cushioning)	Test failed once	Switch the drive unit to Manual operating mode. Carefully check if the door closes in a cushioned manner. • If not: replace hardware • If yes: check/correct the friction of the Door/Gate and the pre-stressing of the closing spring	Prior to closing cycle (after startup)	W
			Test failed twice			
	02		Damping defective			F (Drive unit is functioning Buzzer Active)
			Opening beyond range of operator			

Error No		Description	Cause	Elimination	Checking time	Reaction
E4	01	Reference switch	Range of operator detected in the Open Position	• Check: ○ The connection ○ Switching the point of the reference switch • Reference switch must be activated in closed position (switch contact to open)	Open position	F
	02		Not detected in the Closed Position		Prior to the first setup run	A
	03		Not detected in the closed Position			
	04		Not detected in the open position in “INVERS” mode	• Before start (teach) door must be in open position • Reference switch must be activated in open position (switch contact open)		
E5	00	Powe limitation	Control overload Maximum power is restricted	• Check/correct: ○ Friction of the Door/Gate ○ Pre-load of closing spring • Ensure maximum door weight is not exceeded	Permanent	A
E10	01	Full teach required	Parameter Ao, Rod, Invers or dAxis was changed	Carry out a learn cycle	Upon changing the drive unit configuration	H
	02		Minimum opening angle has not been achieved	Check the locking/ electric lock	During teach	H
E11	01	Half teach required (opening)	Parameter Vo changed	Carry out a complete and unhindered opening cycle	Upon changing the speed parameters	W
	02	Half teach required (closing)	Parameter Vc or ForceSlam changed	Carry out a complete and unhindered closing cycle		

Error No		Description	Cause	Elimination	Checking Time	Reaction
E14	01	Locking/Electric lock	The Door/Gate got caught in the locking/electric lock	Check the function of the locking/electric lock	When opening from a closed position	H
	02		The inverted operation has no locking, or the interlocking force Fch has not been programmed	Program/increase the interlocking force Fch	At the end of the teach procedure	W
E15	01	Obstacle during opening	Too many successive obstacles have occurred	• Examine the installation • Remove the obstacle • Move the Door/Gate to the target position	Permanent	H, A Restart after 60 seconds
	02	Obstacle during closing				
E16	01	Temperature	Temperature on output level has reached 178°F	Allow the unit to cool down	Permanent	A Drive unit functions with reduced power
	02		Temperature on output level has reached 196°F			A Drive unit has stopped
E20	01	SER test	SER test signal unsuccessful	SER short circuit to the earth. Check the cabling of the sensor or the jumper	Prior to closing	A
	02		SER too slow	SER reacts too slowly. Check the cabling for the sensor. Check for polarity reversal/test signal.	E20-01 and E20-02 together, no line in between, like E21	
E21	01	SES test	SES test signal unsuccessful	SES short circuit to the earth. Check the cabling of the sensor or the jumper.	Prior to opening	A
	02		SES too slow	SES reacts too slowly. Check the cabling of the sensor. Check for polarity reversal/test signal.		

Error No		Description	Cause	Elimination	Checking time	Reaction
E22	01	NOT test	NOT input on 24v	Check the jumper NOT. Check the cabling of the NOT	Permanent	H
	02		Malfunction	Restart the control unit SW update necessary	After power up	
E30	01	30v error	30v too low	Main's failure, overload motor. Check 115vac line. Replace hardware	Permanent	A
	02		30v too high			
	03		Error upon switching on		After power up	
E31	01	24v general	Error upon switching on	Overload, short circuit of the 24v inputs (without electric lock, safety sensors)	After power up	A (restart after 10 seconds)
	02		Over-resp, under-voltage		permanent	
E32	01	24v safety	Over-resp, under voltage	Overload, short circuit safety sensors		
E33	01	24v E-lock	Error: over-resp under voltage	Overload, short circuit electric lock		
	02		Premonition: over-resp under voltage			w
E34	01	24v CAN	Over resp under voltage	Overload, short circuit external power supply CAN		
E60	00	Relay PCB 0	Optional PCB has been removed, its address changed or became defective	Check if the option is provided. If defective: replace or remove from configuration.	Permanent	W
	10	Relay PCB 1				W
	20	Radio PCB				W
	30	Fire Protection				A
E50 E51 E52	01-99	System error	Unexpected hardware or software event	Switch the drive unit Off/On. Carry out a Factory Reset, Carry out a software update, inform the manufacturer	permanent	W or H or F
E70	XX	CAN bus setting	CAN address XX existing twice	Correctly define the role of the closing sequence or the interlock function	Permanent	W
E71	01	CAN connection	No CAN connection	Plug in, check, or replace the CAN cable Check if all the CAN participants are switched on	Permanent	W

Error No		Description	Cause	Elimination	Checking time	Reaction
E80	01	Continuous routine	Malfunction	-----	Permanent	W
	02			Power down then power up		F
E81	01	MCU routine		-----	Before: opening Door/Gate Closing Door/Gate	W
	02			Power down then power up		F
E82	01	Dynamic routine	Damping test failed	-----	After power down then every 24hrs when Door/Gate is closing	W
	02			Power down then power up		F
E83	01	Static routine	Motor current test failed	-----	Test occurs at the door closed position	W
	02			1. Power down then power up again 2. If problem is not resolved, turn the “ForceSlam potentiometer adjuster” fully counterclockwise. 3. If the problem still is not resolved, replace the faulty control and or motor operator.		F

SECTION VI

TERMINAL CONNECTIONS

AND

WIRING SCHEMATICS

VI.1 TERMINAL CONNECTION CHART

Terminal	Description	Connector	Description
X101	Opening command outside (OEO)	8	24VDC
		9	OEO
		10	GND
X101	Opening command inside (OEI)	11	24VDC
		12	OEI
		13	GND
X102	Key Operated Switch	1	24VDC
		2	KEY
		3	GND
X103	Plug in connection to the Power Supply Unit	N/A	N/A
X104	Programmable Emergency Close or Open or Stop	4	EmA
		5	EmB
X105	Safety Devise Stop	14	SE 24V
		15	SE Stop
		16	SE Test
		17	GND
X106	Jumper	N/A	N/A
X107	Safety Devise Reverse	18	SE 24V
		19	SE Rev
		20	SE Test
		21	GND
X108	Electric Lock	27	EL 24V
		28	GND
		29	EL-COM
		30	EL-NO
		31	EL-NC
		32	EL-Fb
X110	External Program Selector	N/A	N/A
		N/A	N/A
		N/A	N/A
		N/A	N/A
		N/A	N/A
		N/A	N/A

Terminal	Description	Connector	Description
X111	Present Sensor (Sensor is only checked before the door moves)	PU	Programmable I/O Voltage
		PI	Programmable Input
		PO	Programmable Output
		PG	GND
X113	Connection to the Encoder	N/A	N/A
X114	Power/Program Selector Switch	N/A	N/A
X115	Serial Port	N/A	N/A
X116	Connection to the Relay PCB Board	N/A	N/A
X117	Can Bus (for dual door installation)	CG	GND
		CL	CAN Low
		CH	CAN High
X118	USB/Service	N/A	N/A

VI.2 WIRING SCHEMATIC DIAGRAMS

Fig VI.1 Non-Powered Activation Devices

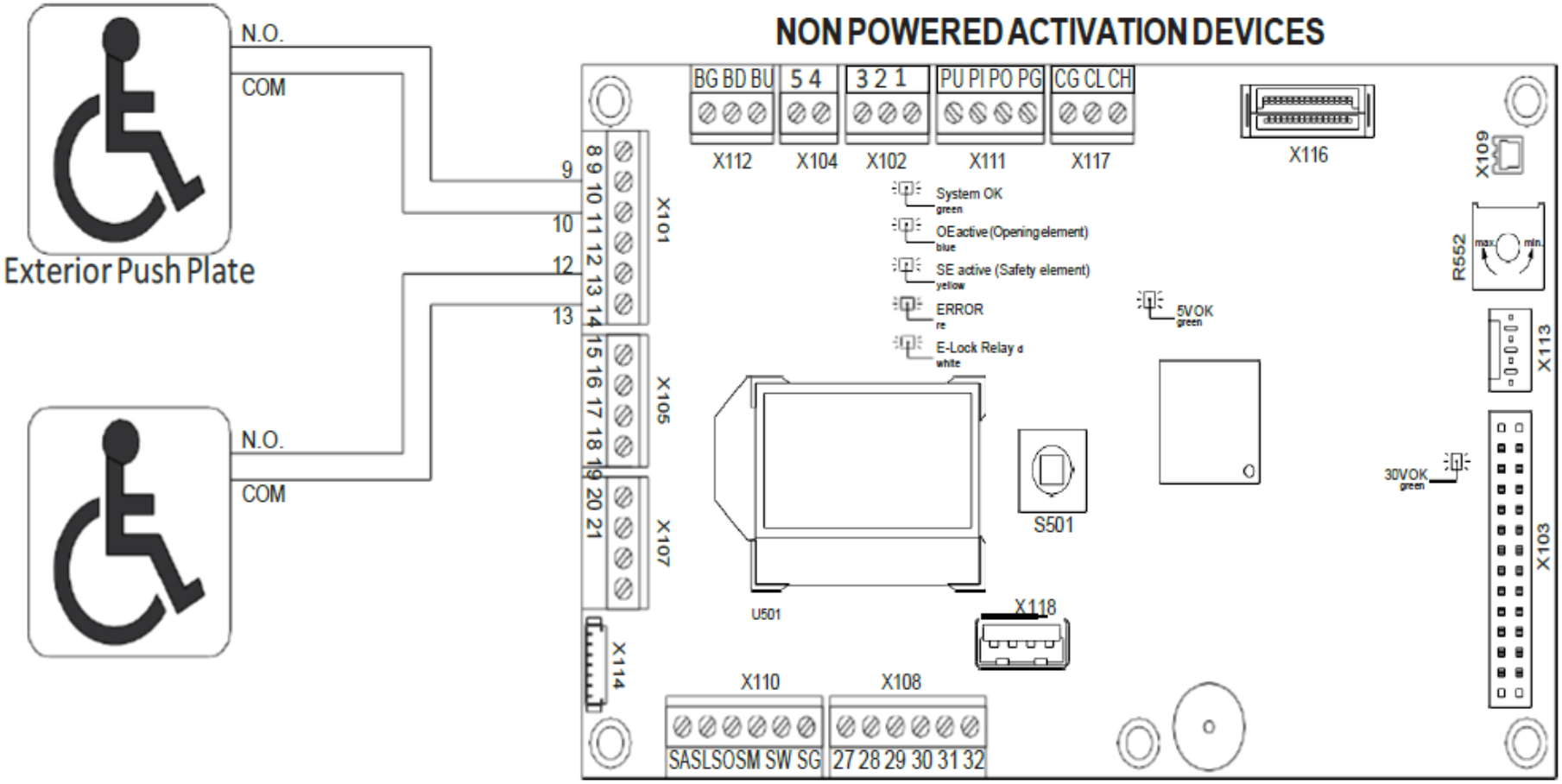

Fig VI.2 Powered Activation Devices

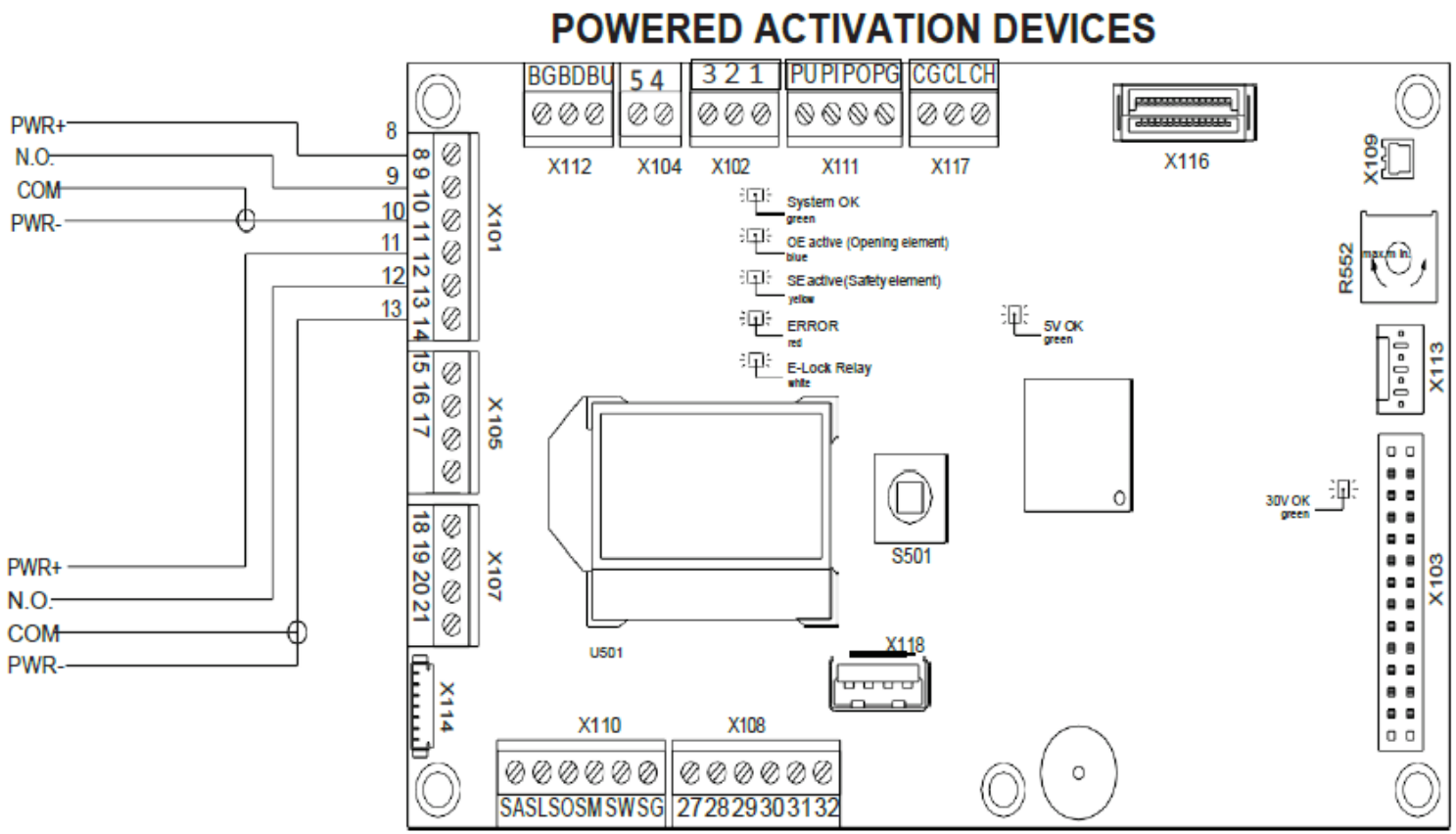

NOTE: Do not exceed 2A 24V draw from the Board. TORXUN recommends one board powered accessory only. Others should be powered by independent power supplies.

Fig VI.3 Locking Devices Powered by the AUTOPED Operator

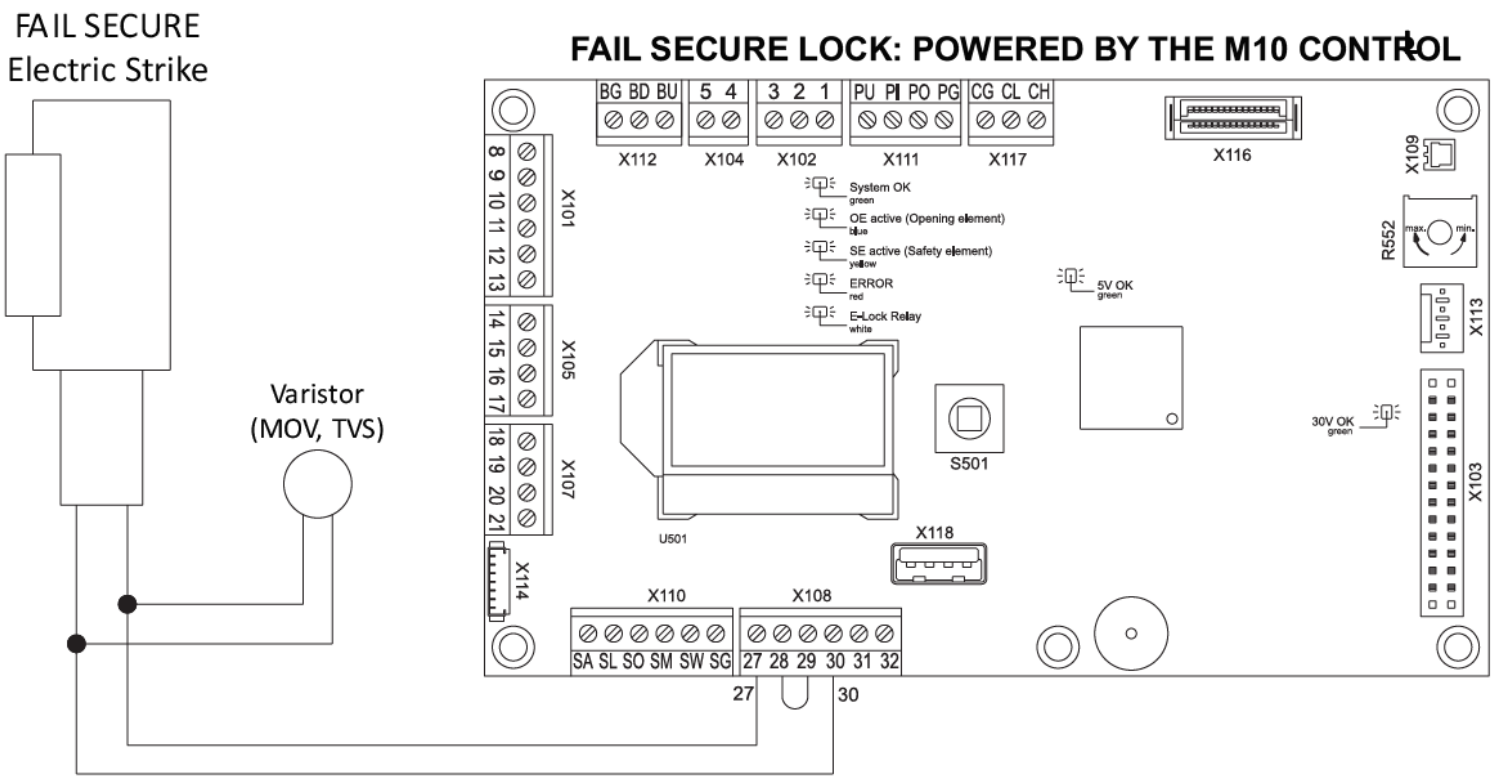

NOTE: Do not exceed 2A 24V draw from the Board. TORXUN recommends one board powered accessory only. Others should be powered by independent power supplies

Fig VI.4 Locking Devices Powered by Another Source (not powered by AUTOPED Operator)

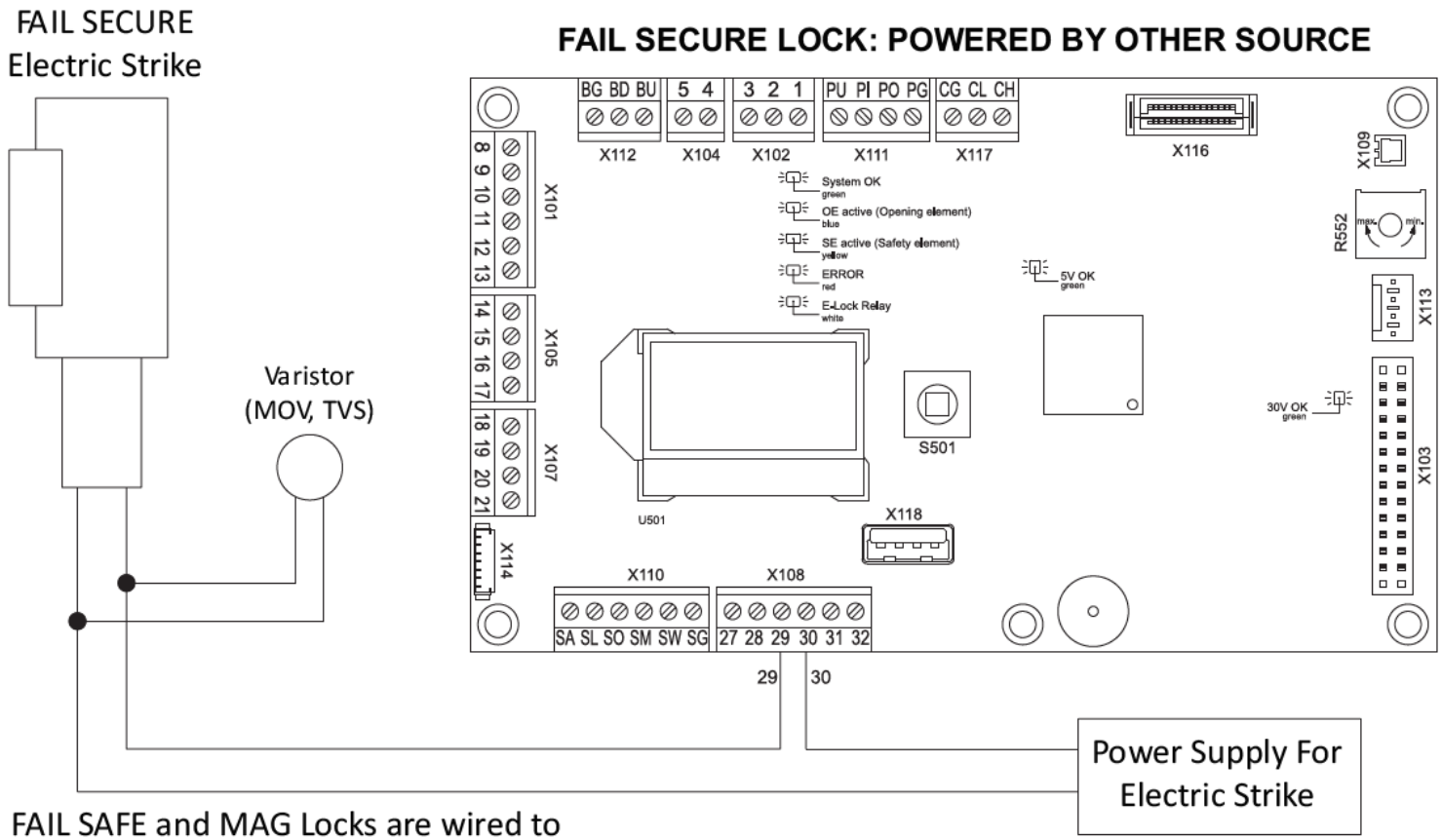

- FAIL SAFE and MAG Locks are wired to Terminal 31 (EL-NC) instead of 30 (EL-NO).
- If the FAIL SECURE Lock has a built-in FeedBack Switch, connect the Feed-Back Switch to Terminals 28 (GND) and 32 (EL-Fb).
- Power for Lock: 24 VDC (800mA max.)

Fig VI.5 Secured Activation Devices

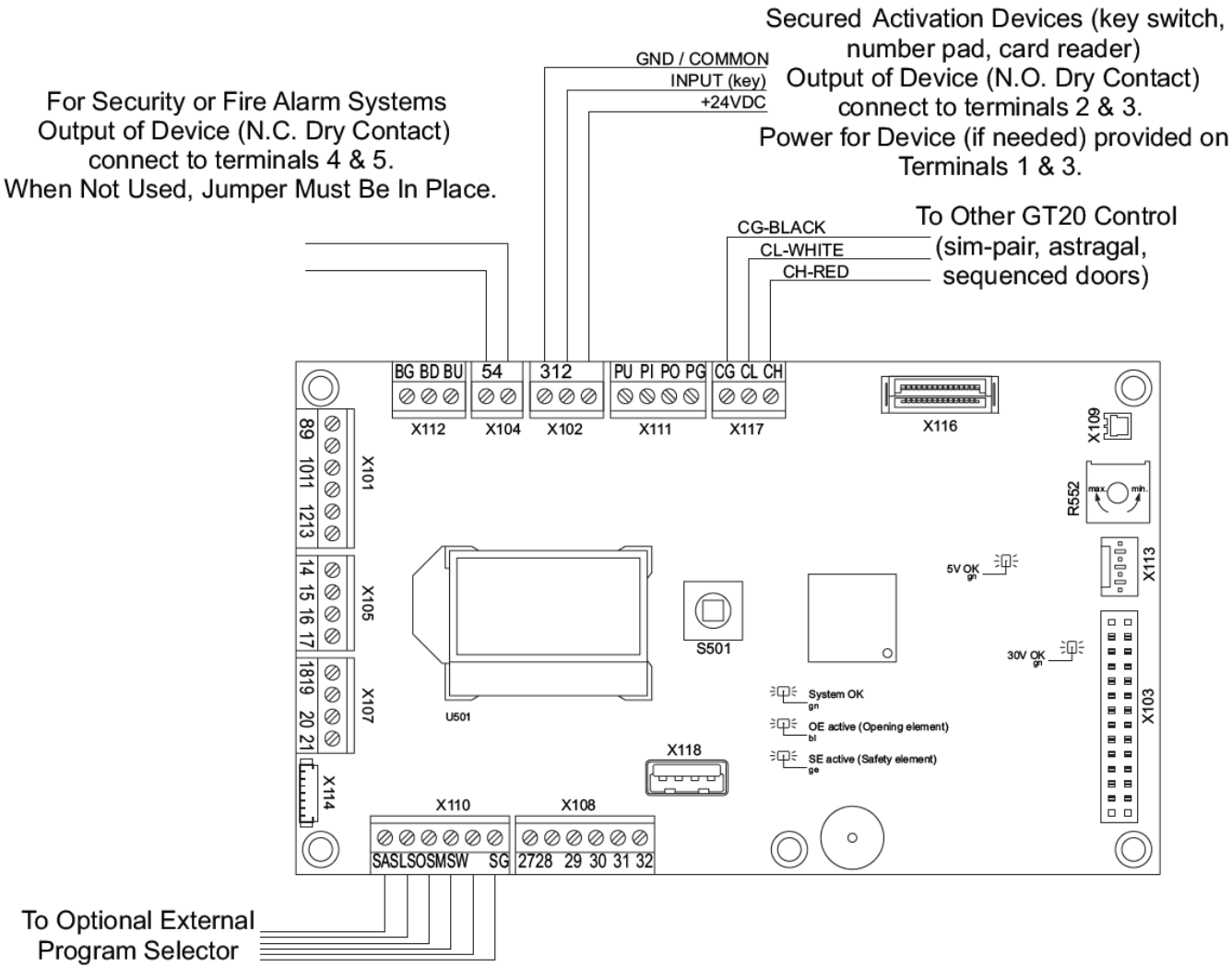

Fig VI.6 Wiring for Double Door/Gate System

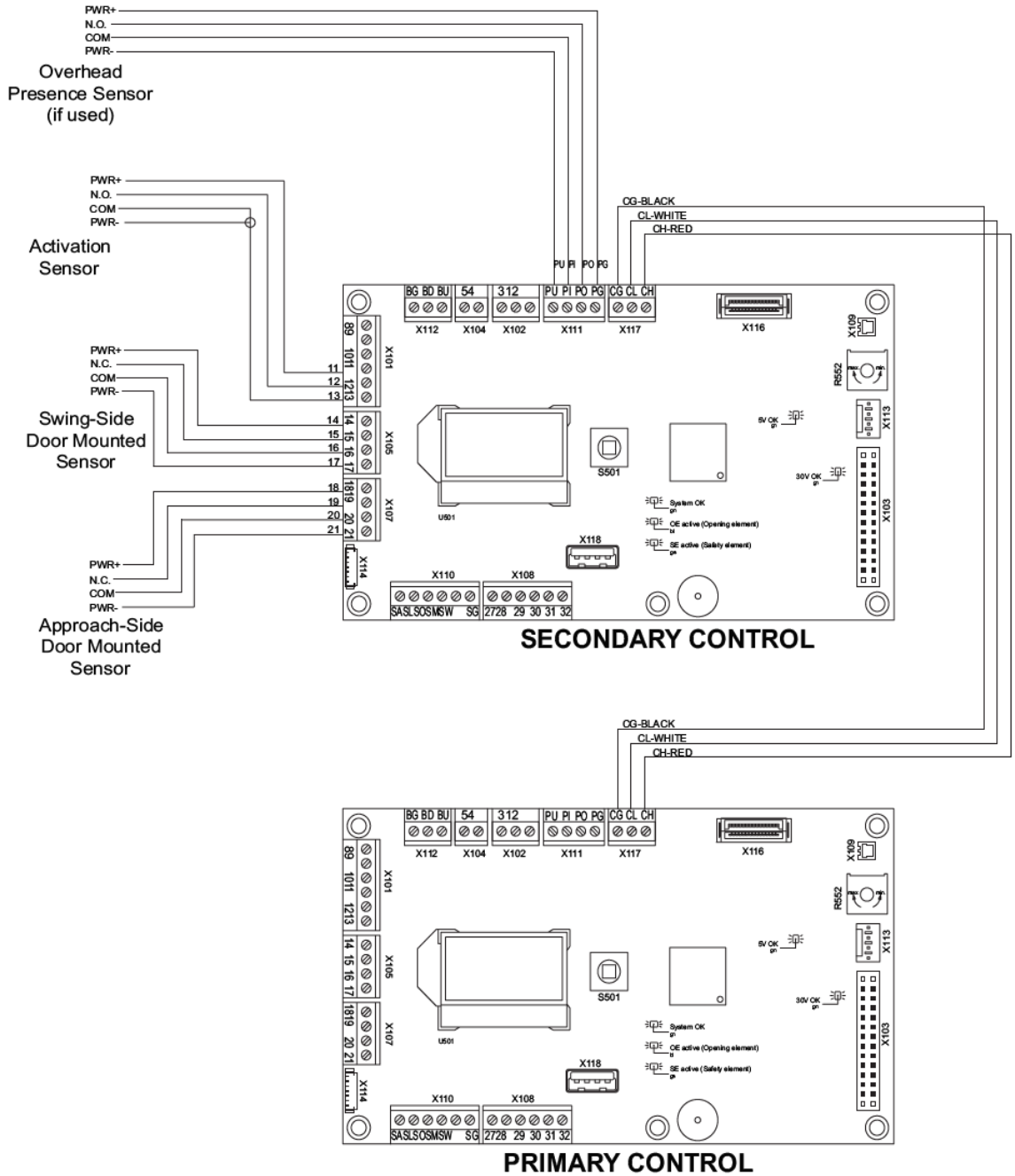

SECTION VII

SERVICE PARTS

VII.1 SERVICE PARTS/COMPONENTS VISUAL GUIDE

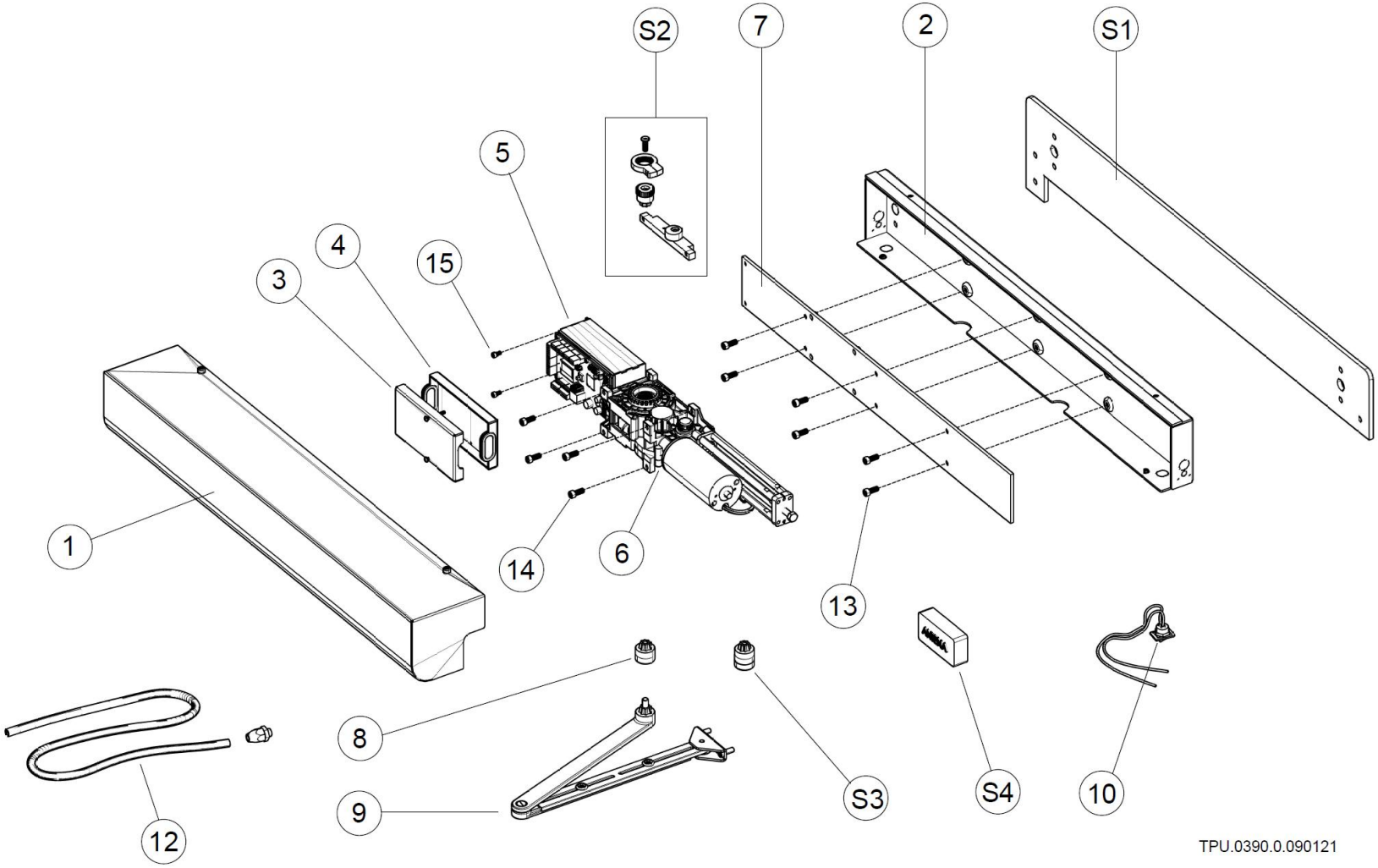

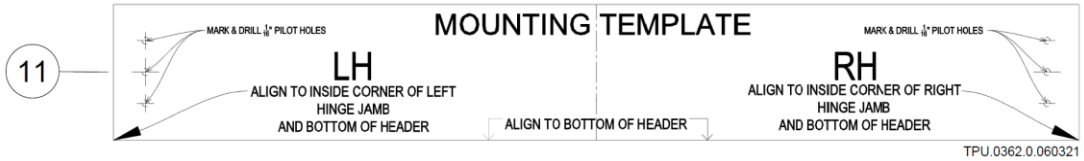

VII.2 STANDARD PARTS LIST

ITEM NO.	TORXUN PART NUMBER	DESCRIPTION	QTY
1	M10S.0001 REV A	ENCLOSURE - FRONT COVER	1
2	M10S.0001 REV A	ENCLOSURE - CHASSIS	1
3	M10S.0020	CONTROL UNIT FRONTCOVER	1
4	M10S.0019	CONTROL UNIT REARCOVER	1
5	M10S.0022	CONTROL UNIT	1
6	M10S.0021	MOTOR-GEARBOX ASSEMBLY	1
7	M10S.0010	MOUNTING PLATE	1
8	M10S.0017	SPINDLE EXTENSION 20MM	1
9	M10S.0028	SWING ARM ASSY	1
10	M10S.0025	ROCKER SWITCH KIT	1
11	M10S.0034	PAPER MOUNTING TEMPLATE	1
12	M10S-0048	CONDUIT ADAPTER KIT	1
13	M10S.0027	M6 -1 x12 (fastens mounting plate to chassis)	6
14	M10S.0026	M6 -1 x 18 (fastens gearbox to mounting plate)	4
15	M10S.00XX	M4 x 10 (fastens control unit box to mounting plate)	2

VII.3 OPTIONAL PARTS LIST

ITEM NO.	TORXUN PART NUMBER	DESCRIPTION	QTY
S1	M10S.0011	STIFFENERPLATE	(1)
S2	M10S.0040	POSITIVE STOP KIT	(1)
S3	M10S.0018	EXTENSION SPINDLE 30MM	(1)
S4		RADIO FREQUENCY ACTIVATION KIT (pending)	(1)